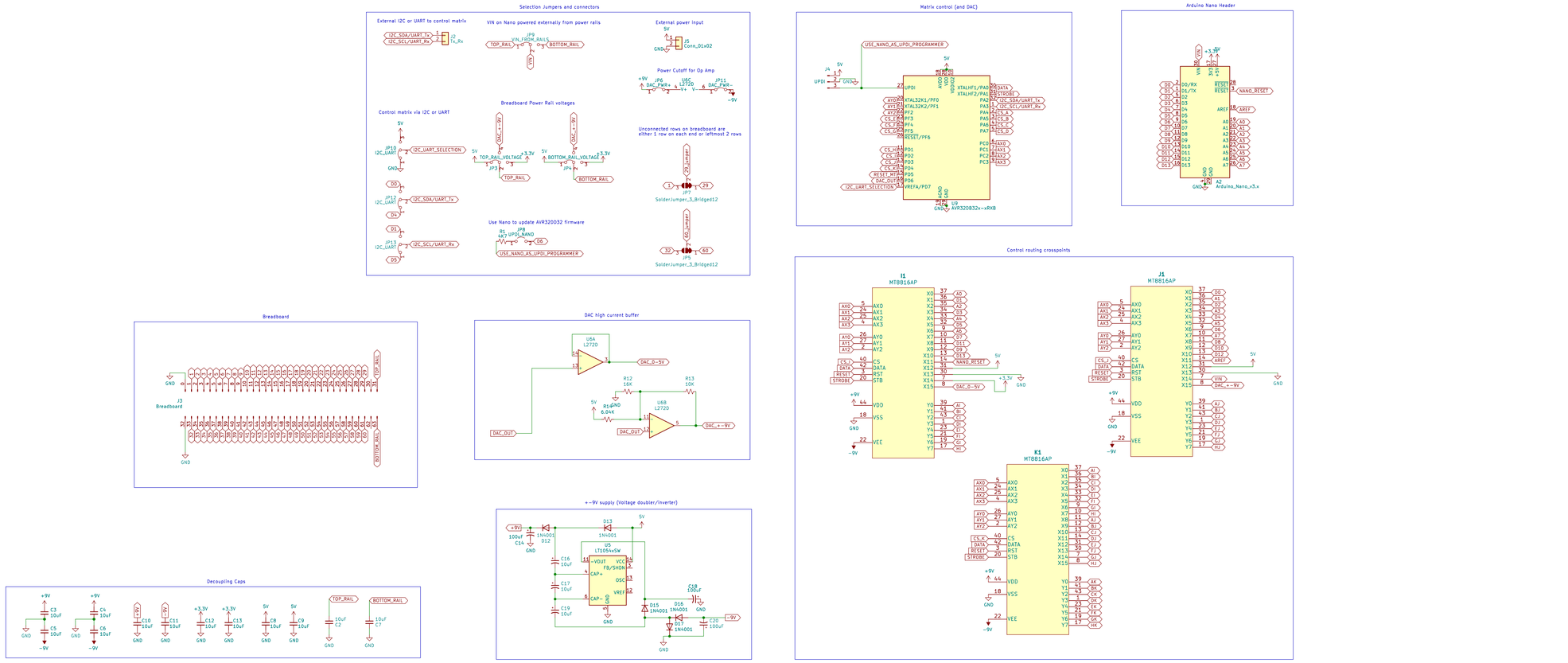

Sheet: /
File: JumperlessArduino.kicad_sch

Title:

Size: A1	Date:	Rev:
KiCad E.D.A. kicad (7.0.0-rc1-358-g86c12d35b4)		Id: 1/1